9IS5496400

eliwell by Schneider Electric

EWHT 600 NT

Controllers for temperature and humidity regulation in static and ventilated cold rooms

English

QUICK START

Product related information

⚠⚠ DANGER

HAZARD OF ELECTRIC SHOCK, EXPLOSION OR ARC FLASH

- Disconnect all power from all equipment including connected devices prior to removing any covers or doors, or installing or removing any accessories, hardware, cables or wires.
- Always use a properly rated voltage sensing device to confirm the power is off where and when indicated.
- Before powering the device back up, fit back and fix all the covers, hardware components and wiring.
- Check the earthing connections on all earthed devices.
- Use only the specified voltage when operating this equipment and any associated products.
- Comply with all standards regarding accident protection and local applicable safety directives.

Failure to follow these instructions will result in death or serious injury.

⚠ DANGER

POTENTIAL OF OVERHEATING AND FIRE

- Do not use with loads other than those indicated in the technical specification.
- Do not exceed the maximum permitted current; for higher loads, use a meter with sufficient power capacity.

Failure to follow these instructions will result in death or serious injury.

⚠ WARNING

UNINTENDED EQUIPMENT OPERATION

- The equipment signal cables (probes, digital inputs, communication, and the relative power supplies) must be routed separately from the power cables.
- Every end application of this device must be tested individually and completely in order to check its proper operation before putting it in service.

Failure to follow these instructions can result in death, serious injury, or equipment damage.

⚠ WARNING

HAZARD OF OVERHEATING AND/OR FIRE

Verify that your application has not been designed with device outputs connected directly to devices generating a frequently operated capacitive load [(1)].

Failure to follow these instructions can result in death, serious injury, or equipment damage.

[(1)] Even if your application does not apply a frequently operated capacitive load on the relay, capacitive loads will reduce the life of any electromechanical relay, and installation of a contactor or an external relay, that is sized and maintained according to the dimensions and characteristics of the capacitive load, will help minimize the consequence of relay degradation.

⚠ WARNING

UNINTENDED EQUIPMENT OPERATION DUE TO ELECTROSTATIC DISCHARGE

Before handling the equipment, always discharge the static electricity from the body by touching an earthed surface or type-approved antistatic mat.

Failure to follow these instructions can result in death, serious injury, or equipment damage.

HACCP Module

NOTICE

INOPERABLE EQUIPMENT

For TTL serial line connection, use cables no longer than 1 m (3.28 ft).

Failure to follow these instructions can result in equipment damage.

NOTE: For information on the cables to be used with the HACCP Module, contact your local Eliwell representative.

English

INTRODUCTION

The **EWHT 600 NT** is a compact controller for temperature and humidity regulation in static or ventilated cold rooms. In the default configuration, it supports combined temperature and relative humidity (RH) control, coordinating cooling and humidity functions.
Alternatively, the controller can be configured for temperature control with refrigerant gas leak alarm management when combined with an LKDNext Leak Detector. In this mode, humidity functions are disabled and the device manages gas concentration display and Warning / Danger alarm signalling via dedicated relay outputs.
EWHT 600 NT has 6 configurable relays, 2 configurable digital inputs for door switches or other devices and 4 analog inputs (3 x NTC and 1 x 4...20 mA). Models are available with clock, yearly calendar and HACCP event logging.
The instrument can be connected to Televis**System** / Modbus, via the **RS-485 plug-in module** (optional) and is compatible with Eliwell AIR Silent Guardian service, powered by AIR Edge (Wi-Fi), via TTL.
The box lets you install one or more electromechanical devices, depending on the model.
This summary document contains basic information about the standard **EWHT 600 NT models**.
For further information and custom configurations, refer to the complete user guide code **9MA10323**, available for download from the website **www.eliwell.com (https://www.eliwell.com/doctag=9MA10323).**

INSTALLATION PROCEDURE

1) Remove the cover and drill the holes for the cable clamps (at least one for power cables and one for signalling cables) on the bottom of the panel. **NOTE**: use the drilling template provided.

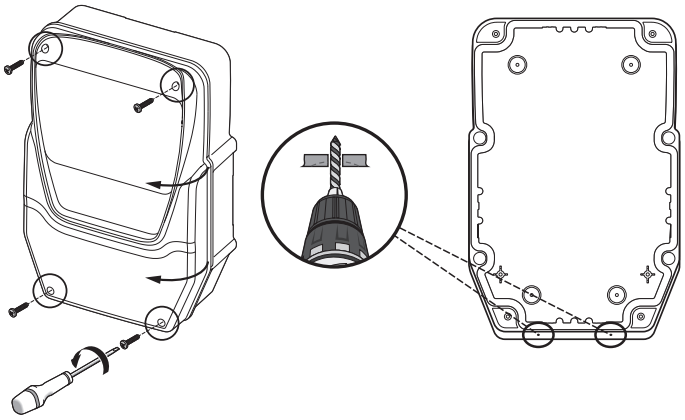

2) Drill the wall fixing holes on the back of the panel, in the areas marked on the back.

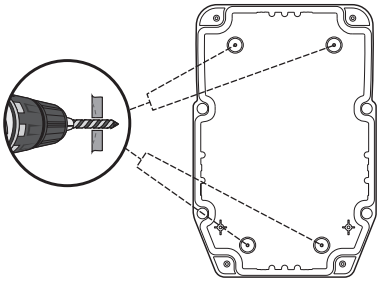

3) Fix the back of the panel to the wall using four screws (not supplied) suited to the wall thickness.
NOTE: TDI20 screw caps (not provided) can be fitted at the wall mounting points so that the IP rating is not altered.

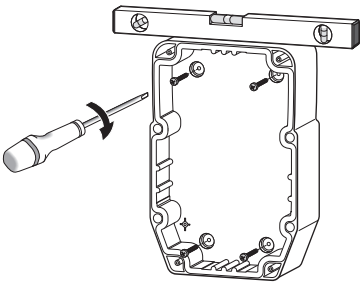

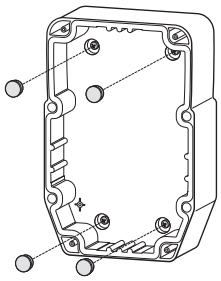

English

4) Fit the hinges to secure the cover.

Fit the hinges provided into their housings on the right or left side of the panel and tighten the corresponding screws to secure them.

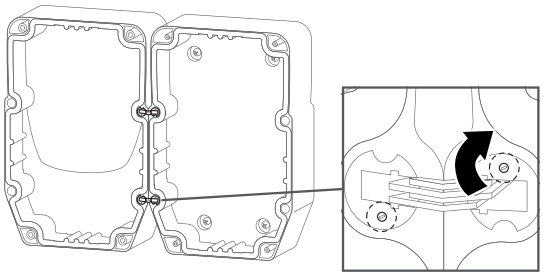

5) Close the cover and secure it with the screws provided.

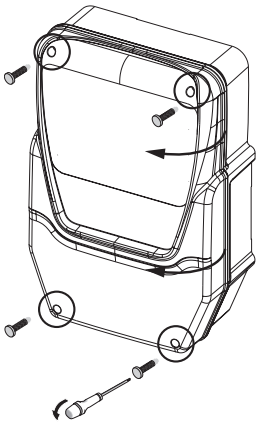

English

⚠ ⚠ DANGER

RISK OF ELECTRIC SHOCK, EXPLOSION OR EXPOSURE TO ACCESSIBLE PARTS

The final application must disallow access to parts at hazardous voltage, as the instrument offers no intrinsic protection against this risk.

Failure to follow these instructions will result in death or serious injury.

6) In models with window aligned with DIN rail only.
Use the dedicated plugs (code 1602149) to prevent access to the inside of the panel through the front window.
NOTE: the end user is responsible for ensuring that the open parts of the box are not accessible.

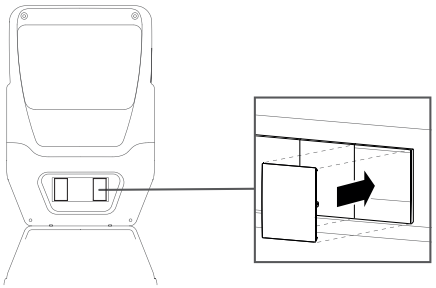

7) Close the door *(b)*

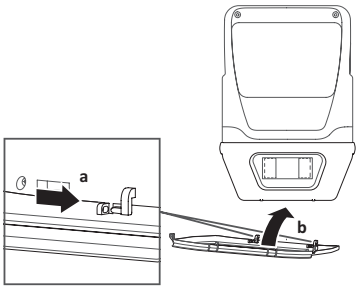

ELECTRICAL CONNECTIONS

Digital Outputs (default settings)
- relay **OUT1** = Compressor (or liquid line valve)
- relay **OUT2** = Defrost
- relay **OUT3** = Evaporator fan
- relay **OUT4** = Light

OUT1-4 Maximum current on common pole: 18 A
- relay **OUT5** = Humidify
- relay **OUT6** = Dehumidity

Analog Inputs (default settings)
- **Pb1** = Cold room NTC probe
- **Pb2** = Defrost end NTC probe
- **Pb3** = Not configured
- **Pb4** = 4...20 mA

Use parameter **H00** to switch between NTC/PTC probe types. **SWITCH THE INSTRUMENT OFF AND ON AGAIN** after the change.

Digital Inputs (default settings)
- **DI1** = Door switch
- **DI2** = External alarm **/ Pb3** as alternative

Serial ports
- **TTL** Compatible with AIR Silent Guardian powered by Eliwell AIR Edge (Wi-Fi).
- **TTL** for connection to HACCP Module / Eliwell AIR Edge (Wi-Fi) / UNICARD / Copy Card / Televis**System**
- **RS-485** available **ONLY** with the optional plug-in module for connecting to Televis**System** / Modbus.

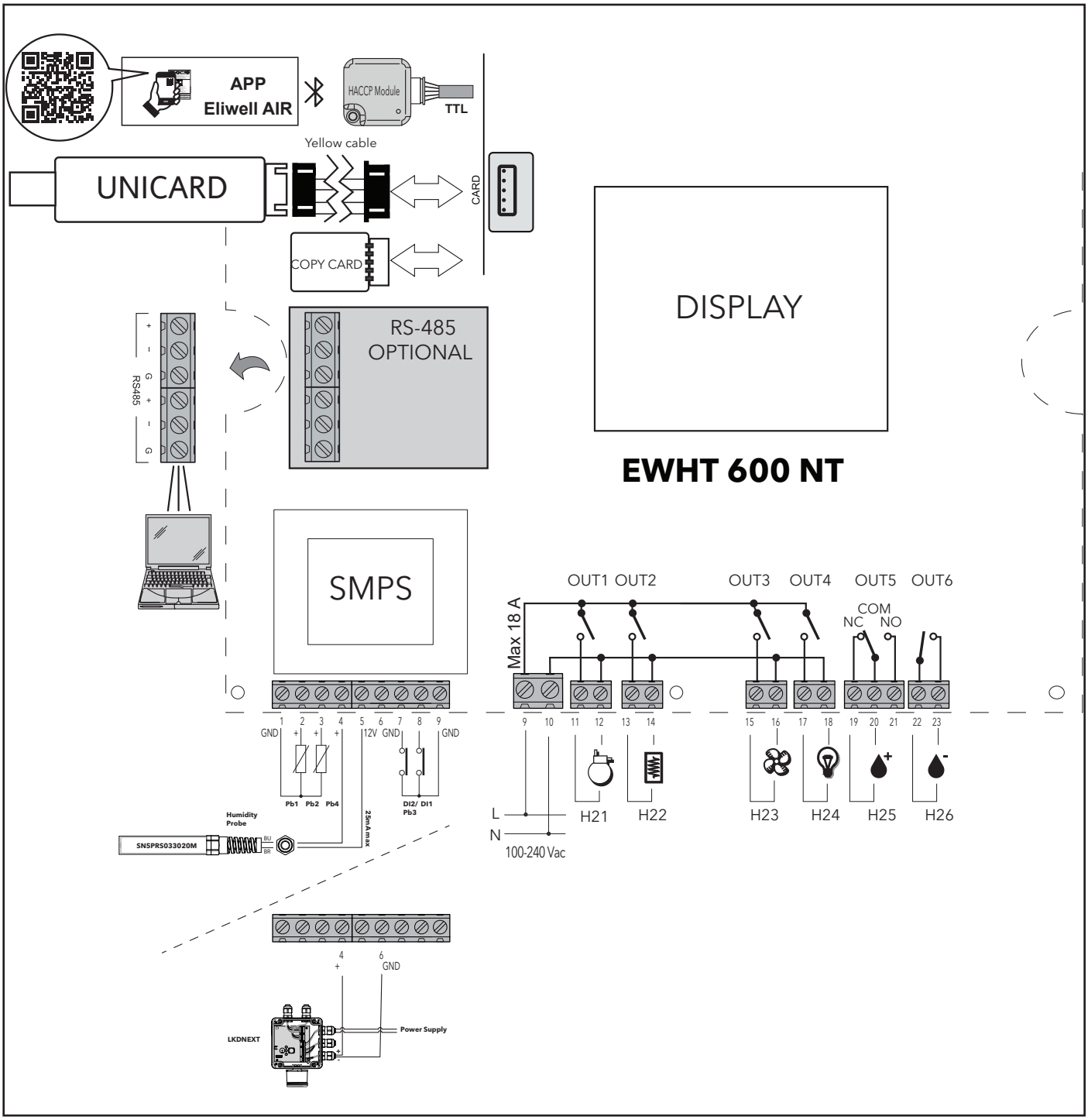

English

⚠⚠ DANGER

LOOSE WIRING CAN RESULT IN ELECTRIC SHOCK

- Tighten connections in conformance with the torque specifications.
- Do not insert more than one wire per connector of the terminal block unless using the cable ends (ferrules) specified below.

Failure to follow these instructions will result in death or serious injury.

Use copper conductors only.

• Analog inputs and digital inputs, relays: screw terminals with spacing 5.08 mm (0.197 in):
electric cables with max. cross-section 2.5 mm² (AWG 14).

mm / in. (7 / 0.28)								
mm²	0.2…2.5	0.2…2.5	0.25…2.5	0.25…2.5	2x0.2…0.75	2 x 0.2…0.75	2x0.25…0.75	2 x 0.5...1.5
AWG	*24…14*	*24…14*	*22...14*	*22...14*	*2 x 24…18*	*2 x 24…18*	*2 x 22…18*	*2 x 20...16*

Ø 3,5 mm (*0.14 in.*)	C	N•m	0.5...0.6
		lb-in	*4.42...5.31*

• Power supply: screw terminals with spacing 7.62 mm (0.30 in.):
electric cables with max. cross-section 4 mm² (AWG 12).

mm / in. (7 / 0.28)								
mm²	0.2…4	0.2…2.5	0.25…2.5	0.25…2.5	2 x 0.2…1.5	2 x 0.2…1.5	2x0.25…0.75	2 x 0.5...1.5
AWG	*24…12*	*24…14*	*22...14*	*22...14*	*2 x 24…16*	*2 x 24…16*	*2 x 22…18*	*2 x 20...16*

Ø 3,5 mm (*0.14 in.*)	C	N•m	0.5...0.6
		lb-in	*4.42...5.31*

⚠⚠ DANGER

RISK OF ELECTRIC SHOCK, EXPLOSION OR EXPOSURE TO ACCESSIBLE PARTS

Prevent access to parts at hazardous voltages, as the instrument offers no protection against this risk.

Failure to follow these instructions will result in death or serious injury.

English

Flammable refrigerant gases

This equipment is designed to operate outside all hazardous locations.
Install this equipment only in areas known to be free from dangerous atmospheres at all times.

⚠ DANGER

POTENTIAL FOR EXPLOSION

Install this equipment only in locations where flammable refrigerants cannot accumulate, even in the event of a leak.

Failure to follow these instructions will result in death or serious injury.

For information regarding the use of control equipment in applications capable of generating dangerous atmospheres, contact the relevant national regulatory bodies or certifying authorities.

MODELS WITH DOOR | EWHT 600 NT 4-DIN

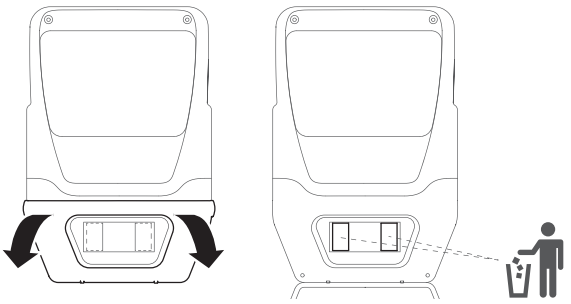

The end user is responsible for ensuring that open parts of the box cannot be accessed.

Versions with a door on the front panel allow direct access to the switch or to the top part of the device installed on the internal DIN rail.
To open the door, use both hands as shown in the figure. Use your thumbs to apply gentle pressure at the top to release the side tabs. Simultaneously with the index finger gently pull the door toward you.
Versions with a door always have the omega DIN rail installed.
You can mount up to a maximum of 4 DIN modules.
It is easy to enlarge the window on the DIN housing from 2 to 4 DIN, using the knockouts.

EWHT 600 NT – Operation with Factory Default Configuration

Parameters

Parameter	Folder	Description	UM	Range
CHC	inS/CPr	Dehumidify control type 0 = Dehumidification independent from Cooling 1 = Cooling priority over Dehumidification (factory setting)	flag	0/1
SEH	USr/CPr	Humidity setpoint	%RH	0…100
PbH	inS/CPr	Humidity control probe selection 0 = disabled 1 = enabled	flag	0/1
CHt	inS/CPr	Humidity-temperature control type	num	0/1/2/3
dEH	inS/CPr	Humidity regulation during defrost. 0 = disabled during defrost 1 = enabled during defrost	flag	0/1
dbH	USr/CPr	Humidity intervention semi-band	%RH	0...50
dFH	USr/CPr	Humidification differential	%RH	0...50
CHd	USr/CPr	Humidity control enable differential	%RH	0…30
CHL	USr/CPr	Minimum temperature to enable humidity control	°C / °F	-58.0…302.0
CHH	USr/CPr	Maximum temperature to enable humidity control	°C / °F	-58.0…302.0
CHF	USr/CPr	Humidify-dehumidify out off time	s	0…250
CHn	USr/CPr	Humidify-dehumidify out on time	s	0…250
HuL	USr/FAn	Humidity level selection. 0 = disabled, 1 = Level 1, 2 = Level 2, 3 = Level 3	num	0...3
Hu1	USr/FAn	Evaporator fans on time humidity level 1	min	0…250
Hu2	USr/FAn	Evaporator fans off time humidity level 1	min	0…250
Hu3	USr/FAn	Evaporator fans on time humidity level 2	min	0…250
Hu4	USr/FAn	Evaporator fans off time humidity level 2	min	0…250
Hu5	USr/FAn	Evaporator fans on time humidity level 3	min	0…250
Hu6	USr/FAn	Evaporator fans off time humidity level 3	min	0…250
H2x	USr/CnF	Configuration of digital output x (OUT x). 14 = Humidify, 15 = Dehumidify, 16 = Resistor Dehumidify For the other values, refer to the User Guide	min	0…19

With the factory default configuration, EWHT 600 NT manages **combined temperature and humidity control** using predefined inputs and outputs. Temperature control is performed via the output configured as **Cooling**.

Humidification

Humidity control is performed via the output configured as **Humidification** (parameter **H25 = 14**).
The humidification control operates **independently** from temperature control.

Dehumidification

Dehumidification control is performed via the output configured as Dehumidification (parameter **H26 = 15**).
With the factory setting (**CHC = 1**), **Cooling has priority over Dehumidification**.
When cooling is required, the **cooling relay is activated**, while the **dehumidification relay remains OFF**. Once the temperature setpoint has been reached, if dehumidification is still required, the **cooling relay is deactivated** and the **dehumidification relay is activated**.

Alternative Operating Mode: LKDNext

In the factory configuration, **EWHT 600 NT does not manage the LKDNext leak detector.**
To configure EWHT 600 NT for **LKDNext management as an alternative to combined temperature and humidity control**, refer to the section **"LKDNext Leak Detector Configuration (Step-by-Step)"**.

Alternative Dehumidification Control Logic

EWHT 600 NT allows the configuration of alternative dehumidification control logics, different from the factory default setting.
Dehumidification Independent from Cooling
By setting parameter **CHC = 0** and help ensuring that at least one relay output is configured as **Dehumidification** (parameter **H2x = 15**), dehumidification operates **independently from the Cooling regulator.**
In this configuration, the dehumidification output is controlled exclusively by the humidity regulation logic and does not require the activation of the Cooling output.
Dehumidification with Priority over Temperature Control
By configuring one output as **Cooling** (parameter **H2x = 1**) and one output as **Resistor Dehumidify** (parameter **H2x = 16**), dehumidification is given **priority over temperature control.** When dehumidification is required, the Dehumidification relay keeps the Cooling output active until the humidity setpoint is reached, regardless of the temperature regulation status.
In this operating mode, parameter **CHC is not applied.**

English

LKDNEXT Leak Detector Configuration (Step-by-Step)

As an alternative to the combined temperature and humidity management, the controller can be configured for temperature control with refrigerant gas leak alarm management when connected to an LKDNext Leak Detector.
In this operating mode, humidity regulation is disabled and the EWHT 600 provides gas concentration display as well as Warning and Danger alarm signalling via dedicated relay outputs.

Step 1 – Enter Parameter Menu

1. Power on the EWHT 600 NT
2. Access the parameter menu according to the standard procedure

Step 2 – Configure Leak Detector Input and Display Scaling

Assign the appropriate input channel to the Leak Detector signal
Enable ppm value visualization
Confirm that the displayed value represents ppm / 10

Parameter	Value	Folder	
04U	**1**	inS/CnF	1 = ppm
04P	**1**	inS/CnF	Display shows ppm / 10
H1x [1]	±**21**	inS/CnF	Select the digital input actually wired to the Leak Detector. Sign meaning: +21 → input active when contact is closed -21 → input active when contact is open

[1] As an optional configuration, the alarm relay of the LKDNext Leak Detector can be connected to one of the EWHT 600 NT digital inputs, by setting parameter H1x = ±21.
When the LKDNext Leak Detector is connected to the EWHT 600 NT, refrigerant concentration (ppm) management and visualization are handled via parameters 04U and 04P. These parameters define the unit and scaling of the displayed value. The configuration of the digital input for the LKDNext alarm relay is therefore optional and should be considered as an additional function only. It is not mandatory, since the digital input does not provide ppm value visualization, but only a binary alarm status.

English

Step 3 – Configure Relay Outputs

Assign one relay to LKDNext Warning / Assign one relay to LKDNext Danger

Relay Configuration for Leak Detector Alarms

Parameter	Value	Folder	Function	Example
H21...26	**17**	inS/CnF	LKDNext Warning	H24 = 17 (Warning)
H21...26	**18**	inS/CnF	LKDNext Danger	H25 = 18 (Danger)

Alarm Thresholds

Parameter	Folder	Meaning
ALL	InS/diS	Leak Warning threshold
ALH	InS/diS	Leak Danger threshold
AL1	InS/diS	Warning delay
AL2	InS/diS	Danger delay
04d	InS/diS	Common differential

Step 4 – Changing between temperature/humidity control and temperature + leak detection control

After switching between temperature/humidity control and temperature + leak detection control (or vice versa), power cycle the device (OFF → ON) to apply the new configuration.

Step 5 – Verify Operation

Simulate warning and danger conditions / Verify display update and relay activation

- Simulate Warning level → relay assigned as LKDNext Warning must activate
- Simulate Danger level → relay assigned as LKDNext Danger must activate
- Confirm displayed value is ppm / 10
- Verify Leak Detector / Panic alarm icons

Leak Detector Value Display

The second display row supports 4 digits. Refrigerant concentration is displayed as ppm / 10

Refrigerant Threshold Examples

Refrigerant	Actual Threshold (ppm)	Displayed Value
CO_2	10,000	1,000
NH_3	20,000	2,000

DISPLAY

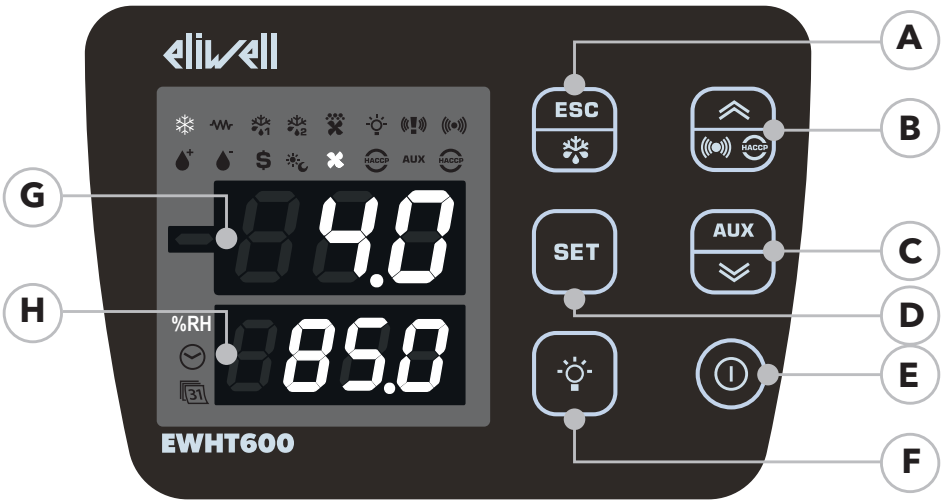

G
3-DIGIT TOP DISPLAY
plus the - sign
- operating value
- parameters label
- alarms, functions

if Top display
flashing
it means that the value of the Bottom Display can be modified

H
4-DIGIT BOTTOM DISPLAY
- Temperature setpoint
- Humidity (%RH), when humidity control is enabled
- Gas concentration (ppm), when used with an LKDNext Leak Detector [1]
- Time

[1] The value is shown only when it exceeds the configured thresholds; otherwise, “SAFE” is displayed

The display provides quick access to the main operating values:
- **Temperature setpoint**
- **Measured temperature**
- **Humidity (%RH)**, when humidity control is enabled
- **Gas concentration (ppm)**, when used with an LKDNext Leak Detector
- **Time**, on models equipped with RTC

In the factory configuration, the display is preset to show the room temperature and humidity.
The information shown on the second 4-digit display depends on the application configuration and is defined by parameter dd2.
According to the value set for dd2, the display can display:
- dd2 = 0 ➔ the temperature setpoint
- dd2 = 1 ➔ the time
- dd2 = 2 ➔ the values read by Pb4 (4...20 mA Probe), either %RH or ppm depending on configuration.

When EWHT 600 NT is connected to the Eliwell AIR app via the HACCP Module or AIR Edge (Wi-Fi), the **btL** label is shown on the TOP display, while icons are disabled.
Press any button to display the temperature and humidity values.

The **SAFE** message is shown on the display when the controller is connected to LKDNext and the measured gas concentration is below the warning threshold.
If the measured gas concentration exceeds the warning threshold, the display shows the ppm value scaled by a factor of 10 (ppm / 10).

English

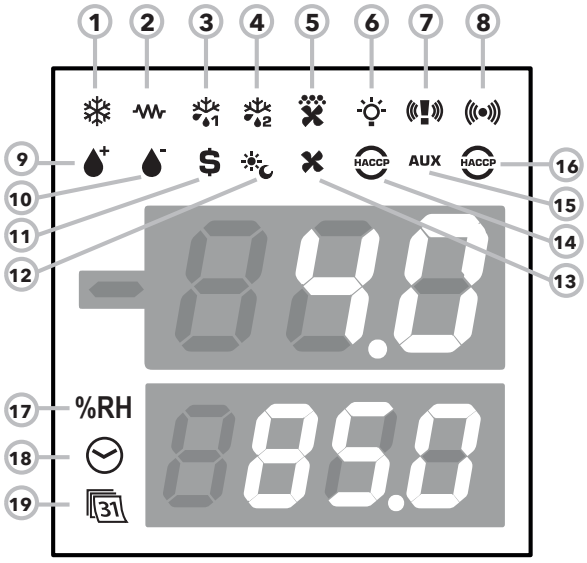

ICONS

No.	ICON	colour	description
17	RH	white	ON when displaying Humidity RH %
18	TIME	white	ON in case of time display or editing
19	DATE	white	ON in case of date display or editing

ALARMS

Alarm	ICON 7	ICON 8	Colour	Buzzer	OFF	
					ICON	Buzzer
ALARM			Red	See "ALARMS TABLE" page 13		
PANIC			Red		---	---
WARNING LEAK DETECTOR			Red			---
PANIC + DANGER LEAK DETECTOR			Red		---	(1)

(1) = As long as the Panic alarm persists it will not be possible to mute the buzzer from the keypad.

N.	Icon	colour	ON	FLASHING	OFF
1	COMPRESSOR	white	Compressor ON	Delay	Compressor OFF
2	RESISTOR	white	Heating ON	/	Heating OFF
3	DEFROST 1	white	Defrost	Dripping	No defrost
4	DEFROST 2	white	Defrost	Dripping	No defrost
5	CONDENSER FANS	white	Fans ON	/	Fans OFF
6	LIGHT	white	Light ON	/	Light OFF
7	PANIC	red	Alarm	Not displayed	No alarm
8	ALARM	red	Alarm	Not displayed	No alarm
9	HUMIDITY +	white	Humidity + ON	/	Humidity + OFF
10	HUMIDITY -	white	Humidity - ON	/	Humidity - OFF
11	ENERGY SAVING	white	Energy saving ON	/	Energy saving OFF
12	NIGHT & DAY	white	Night & Day ON	/	Night & Day OFF
13	FANS	white	Fans ON	/	Fans OFF
14	HACCP	white	HACCP menu	/	/
15	AUXILIARY (AUX)	white	AUX ON	/	AUX OFF
16	HACCP ALARM	red	HACCP alarm	Not displayed	No alarm

English

KEYS

No.	KEY	press and release	press and hold for about 3 seconds	NAVIGATION MENU	Notes
A	ESC Defrost	Functions Menu	• Manual defrost • Return to Main Menu	Output	/
B	▲ UP Alarms	Alarms Menu (always visible)	/	• Scroll • Increase values	HACCP alarms
C	▼ DOWN AUX	system INFO See Technical Support	Activate auxiliary function	• Scroll • Decrease values	/
D	SET	• Display setpoint / probe values / time (Models with clock) • Confirm values • Access value edit mode (top display flashing)	Access Parameters menu	• Confirm values • Move right	display time Models with clock only
E	ON/OFF	/	Switch On/Off device	/	/
F	LIGHT	/	Switch light On/Off	/	/

USER INTERFACE

How to modify the setpoint

- Press and release the SET key. The top display will show SEt, the bottom display will indicate the current setpoint value
- Press and release the SET key once more. The top display will show SEt flashing
- Use the UP & DOWN keys to adjust the setpoint value
- Press the ESC key to return to the normal display

How to read the probe value

- Press and release the SET key. The top display will show SEt, the bottom display will indicate the current setpoint value
- Press and release the DOWN key. If the RTC clock is present, the time will be shown in the bottom display
- Press and release the DOWN key once more. The top display will show Pb1, the bottom display will indicate the value read by the room probe
- Press and release the DOWN key once more to read the value of probes Pb2, Pb4 and Pb3 if configured
- Press the ESC key to return to the normal display

How to modify the User Parameters

The 'User' parameters are the most commonly used. This document describes them in the Parameters Table section.

1) Press and hold the SET button for at least 3 seconds, until the display shows USr
2) Press and release the SET key. The top display will show the first parameter, the bottom display will indicate the current parameter value
3) Using the UP & DOWN keys, find the parameter that you wish to modify
4) Press and release the SET key again. The top display will show the name of the flashing parameter
5) Use the UP & DOWN keys to adjust the parameter value
6) Press and release SET to save the parameter value
7) Return to step 3) or press ESC to return to the normal display.

English

USER PARAMETERS TABLE

This section describes the most commonly used parameters. For a description of all other parameters, see the user guide.

NOTE: the User parameters ARE NOT divided into sub-folders and are always visible by default. The same parameters are also visible in the respective folders 'Compressor', 'Fans', etc. (indicated also here to make the groupings clearer) in the password-protected Installer parameters menu.

NOTE: an Installer Parameters level (inS) is available for advanced configuration of the EWHT 600. For instructions on accessing and navigating the Installer menu, refer to the User Guide

PAR.	DESCRIPTION	UM	RANGE	DEFAULT
SEt	Temperature regulation setpoint	°C/°F	-58.0...302	0.0
	COMPRESSOR (CPr)			
diF	Activation differential	°C/°F	0 ... 30.0	2.0
SEH	Humidity setpoint	%RH	0 ...100	50
	DEFROST (dEF)			
dit	Interval between defrost cycles Time interval between the start of two consecutive defrost cycles. 0 = Function disabled (defrost NEVER performed).	hours	0 ... 255	6
dEt	Defrost timeout Determines the maximum defrost time on Evaporator 1.	min	1 ... 255	30
dSt	Defrost end temperature Defrost 1 end temperature (determined by evaporator probe 1).	°C/°F	-58.0...302	6.0
dPO	Defrost enabling request from power-on Determines whether the instrument must enter defrost mode at power-on (provided that the temperature measured at the evaporator will allow defrost). n (0) = No, no defrost at power-on; y (1) = Yes, defrost at power-on.	flag	n/y	n
	FANS (FAn)			
FSt	Fans lockout temperature; if the value read is greater than FSt, the fans will be stopped. The value may be positive or negative	°C/°F	-58.0...302	0.0

PAR.	DESCRIPTION	UM	RANGE	DEFAULT
FAd	Fans activation differential	°C/°F	0.1 ... 25.0	0.1
Fdt	Fans activation delay after a defrost cycle	min	0 ... 250	0
dt	dripping time. Dripping time.	min	0 ... 250	0
dFd	Operating mode of evaporator fans during defrost. n (0) = no (depending on the FCO parameter); y (1) = yes (fan off).	flag	n/y	y
	ALARMS (ALr)			
AFd	Alarms cut-in differential.	°C/°F	0.1 ... 25.0	1.0
HAL	Probe 1 maximum alarm. Temperature value (intended either as distance from the setpoint or as an absolute value based on Att) above which the probe will trigger activation of the alarm signal.	°C/°F	LA1 ... 302	5.0
LAL	Probe 1 minimum alarm. Temperature value (intended as distance from setpoint or as an absolute value based on Att) under which the probe will trigger activation of the alarm signal.	°C/°F	-58.0 ... HA1	-5.0
tAO	Delay preceding temperature alarm signal. This parameter refers to high/low temperature alarms LAL and HAL only.	min	0 ... 250	0
	DISPLAY (diS)			
LOC	Setpoint edit lock. The parameter programming menu can still be accessed, and the settings changed, which means also that the status of this parameter can be changed so as to unlock the keypad. n(0) = No; y(1) = Yes.	flag	n/y	n
PA1	PAssword 1. When enabled (PA1≠0) this is the access key to User parameters (USr).	num	0 ... 250	0
ndt	Display values with decimal point. n (0) = No (integers only); y (1) = Yes (displayed with decimal point).	flag	n/y	y
	Humidity parameters - FANS (FAn) folder			
HuL	Humidity level selection 0 = disabled 1 = Humidity level “1” / 2 = Humidity level “2” / 3 = Humidity level “3”	num	0 ... 3	0
Hu1	Evaporator fans on time humidity level 1	min	0 ... 250	0
Hu2	Evaporator fans off time humidity level 1	min	0 ... 250	0
Hu3	Evaporator fans on time humidity level 2	min	0 ... 250	0
Hu4	Evaporator fans off time humidity level 2	min	0 ... 250	0
Hu5	Evaporator fans on time humidity level 3	min	0 ... 250	0
Hu6	Evaporator fans off time humidity level 3	min	0 ... 250	0
	Humidity parameters - COMPRESSOR (CPr) folder			
CHC	Dehumidify control type 0 = Dehumidification independent from Cooling 1 = Cooling priority over Dehumidification (factory setting)	flag	0/1	1
CHF	Humidify-dehumidify out off time	s	0 ... 250	0
CHn	Humidify-dehumidify out on time	s	0 ... 250	0
CHt	Humidity-temperature control type 0 = no temperature control (disabled) 1 = control minimum temperature 2 = control maximum temperature 3 = control both minimum temperature and maximum temperature	num	0 ... 3	0
dEH	Humidity regulation during defrost 0 = disabled, 1 = enabled	flag	0/1	0
CHd	Humidity control enable differential	%RH	0 ... 30.0	0.0
CHL	Minimum temperature to enable humidity control	°C/°F	-58.0 ... 302.0	-58.0
CHH	Maximum temperature to enable humidity control	°C/°F	-58.0 ... 302.0	302.0
dbH	Humidity intervention semi-band	%RH	0 ... 50	50
dFH	Humidification differential	%RH	0 ... 50	10
PbH	Humidity control probe selection 0 = disabled 1 = enabled	flag	0/1	0
	COPY CARD / UNICARD (FPr)			
UL	Upload. Transfers programming parameters from the instrument to a Copy Card / UNICARD.	/	/	/
dL	Download. Transfers programming parameters from a Copy Card / UNICARD to the instrument.	/	/	/
Fr	Formatting. Deletes data on the Copy Card / UNICARD. NOTE: If parameter “Fr” is used, the data entered will be permanently lost. This operation cannot be reversed.	/	/	/

English

TECHNICAL SUPPORT

Have the following information available when contacting Eliwell Technical Support:
• IdF firmware version (888)
• rEL firmware version release (for example 1,2,...)
• tAb map code
• HT instrument model (600)

To obtain this information:
• Press and release the DOWN / INFO key
• Press and release the DOWN key once more to display other information about the instrument.
• Press the ESC key to return to the normal display.

ALARMS AND TROUBLESHOOTING

How to display the alarms

1) Press and release the UP key. The top display will always show the label ALr. The bottom display will show:
• nOnE if no alarms active
• SYS to indicate system alarms - see Alarms Table
• HACP to indicate HACCP alarms - see HACCP alarms
2) Using the UP & DOWN keys, find the type of alarm that you want to check

System alarms

The top display will show the label ALr, the bottom display will indicate the alarm code - see Alarms Table
• Use the UP and DOWN keys to scroll through the other alarms
• Press the ESC key to return to the previous alarm code, press the ESC key several times (or keep it pressed) to return to the normal display

HACCP ALARMS

The instrument logs high and low temperature alarms for the cold room probe, as well as any power outage. The alarm types and the duration and start time of the alarm itself will be displayed in the alarms folder ALr. It is possible to disable the recording of alarms and/or resetting of HACCP alarms. See Functions Menu.

English

ALARMS TABLE

This section lists alarms associated with the default configuration of the instrument.
For a description of alarms relating to custom configurations, refer to the user guide or contact Eliwell Technical Support.

Label	Cause	Effects	Problem solving
E1*	Pb1 room probe inoperable • Measured values are outside operating range • Probe inoperable/short-circuited/open	• Label E1 displayed • Maximum and minimum alarm regulator disabled • Compressor operation based on parameters “Ont” and “OFt” if set for duty cycle.	• Check probe type NTC/PTC (see H00) • Check probe wiring • Replace probe
E2*	Pb2 defrost probe inoperable • Measured values are outside operating range • Probe inoperable/short-circuited/open	• Label E2 displayed • The Defrost cycle will end due to time-out (Parameter “dEt”)	• Check probe type NTC/PTC (see H00) • Check probe wiring • Replace probe
E4*	Pb4 humidity probe inoperable • Measured values are outside operating range • Probe inoperable/short-circuited/open	• Label E4 displayed	• Check probe wiring • Replace probe
LA1	Pb1 LOW temperature alarm • Value read by Pb1 < LAL after time of tAO.	• Recording of label LA1 in folder ALr • No effect on regulation	Wait for the temperature value read by Pb1 to come back above LAL+AFd

This section lists alarms associated with the default configuration of the instrument. For a description of alarms relating to custom configurations, refer to the user guide or contact Eliwell Technical Support.			
Label	**Cause**	**Effects**	**Problem solving**
HA1	Pb1 HIGH temperature alarm • value read by probe Pb1 > HAL after time of “tAO”.	• Recording of label HA1 in folder ALr • No effect on regulation	Wait until temperature value read by Pb1 returns below HAL-AFd.
Ad2	End of defrost cycle due to time-out rather than due to defrost end temperature being read by the defrost probe	• Recording of label Ad2 in folder ALr	Await next defrost cycle for automatic return to normal
OPd	• Digital input is activated (set as door switch) See parameters H11 and H12 • Depends on delay set by parameter tdO	• Recording of label OPd in folder ALr • Regulator locked (see para. dOA/PEA)	• Close door • Depends on delay set by parameter OAO
E10	**Models with clock only** Clock alarm: clock inoperable or unpowered for a long time	Functions associated with clock not controlled	Contact Eliwell Technical Support
ALL ALARMS • Alarm icon on continuously. • Buzzer (if present) and alarm relay (OUT5) activated, except Ad2. • Press any key to mute the alarm. The icon changes from steady to flashing. **NOTE**: the buzzer is deactivated while the alarm relay remains active.			
*E1 - E4 - E2: If simultaneous they will be shown alternately on the display at a frequency of 2 seconds.			

English

SOFTWARE TOOLS

EWHT 600 NT can be connected to:
• TelevisSystem or third-party monitoring systems via Modbus protocol
• DeviceManager fast parameter configuration software
• Eliwell AIR App for HACCP Module
• Eliwell AIR Edge (Wi-Fi)
The connection is direct RS-485 using the optional RS-485/TTL plug-in module (not included). See the Wiring diagram.
NOTE: if using the TTL port to communicate, disconnect the RS-485 port and vice-versa.

TECHNICAL DATA

The product complies with the following harmonized Standards	EN 60730-1 / EN 60730-2-9
Construction of control	Electronic automatic Independently mounted Control
Purpose of control	Operating control (not safety related)
Type of action	1.C
Degree of protection by enclosure	IP65
Pollution degree	2
Overvoltage category	II
Rated impulse voltage	2500 V
Ambient operating conditions	Temperature: -5...50 °C (23...122 °F) Humidity: 10…90 % RH (non-condensing)
Transportation and storage conditions	Temperature: -20...85 °C (-4...185 °F) Humidity: 10…90 % RH (non-condensing)
Power supply	SMPS 100...240 Vac (±10%) 50/60 Hz
Power draw (maximum)	7 W
Software class	A
Temperature for ball pressure test	100 °C (212 °F)

FURTHER INFORMATION

Container	PC+ABS
Dimensions	EWHT 600 HT: front panel 213 x 318 mm (8.38 x 12.51 in.), depth 102 mm (4.01 in.) EWHT 600 HT 4DIN: front panel 221 x 318 mm (8.70 x 12.51 in.), depth 107 mm (4.21 in.)
Connections	screw-on terminals (see wiring diagram)
Display range	NTC: -50…110 °C (-58 ... 230 °F) | PTC: -55…150 °C (-67 ... 302 °F) no decimal point, on 2 displays: (top display) 3 digit + sign/ (bottom display) 4 digit
Analog Inputs	**3** NTC inputs, PTC selectable via parameter H00, **1** 4...20mA
Digital Inputs	2 voltage-free digital inputs configurable via parameter H11 and H12
Buzzer	Yes
Serial ports	• 1 TTL port for connection to AIR Edge (Wi-Fi) / HACCP Module / UNICARD / Copy Card / Televis**System** • 1 RS-485 serial port for connection to Televis**System** / Modbus (use with optional plug-in module) **NOTE**: if using the TTL port to communicate, disconnect the RS-485 port and vice-versa.
Accuracy	better than 0.5% of full-scale + 1 digit
Resolution	1 or 0.1 °C (0.1 °F)
Clock backup	Up to four days in the absence of an external power supply

RELAY OUTPUTS INFORMATION

MODEL	EWHT 600 NT	
CODE	HTNS•••••••••• 4DIN models: HTNA••••••••••	
STANDARD	EN60730 max 250 Vac	UL60730 max 240 Vac
OUT1	12(8) A	12FLA - 72LRA
OUT2	10 (6) A	10 A resistive 10FLA 60LRA
OUT3	8(4) A	8 A resistive 4.9FLA 29.4LRA
OUT4	10 (6) A	10 A resistive 10FLA 60LRA
OUT5	NO 8(4) A, NC 6(3) A	NO 8 A resistive, NC 6 A resistive NO 4.9FLA 29.4LRA
OUT6	10 (6) A	10 A resistive 10FLA 60LRA
NOTE	Maximum current on common pole: 18 A	

⚠ **WARNING:** This product can expose you to chemicals including nickel, lead and lead compounds which are known to the State of California to cause cancer and birth defects or other reproductive harm.
For more information go to **www.P65Warnings.ca.gov.**

General Cybersecurity Information: Scan this code to access the Cybersecurity Portal.

English

USE CONDITIONS

Permitted use

The device must be installed and used in accordance with the instructions provided. In particular, parts carrying dangerous voltages must not be accessible under normal conditions.

It must be adequately protected from water and dust with regard to the application, and must only be accessible using tools or a keyed locking mechanism (with the exception of the front panel).

The device is suitable for use in household refrigeration appliances and/or similar equipment and has been tested in accordance with the harmonized European reference standards.

Prohibited use

Any use other than that expressly permitted is prohibited. The relays provided are of a functional type and can be subject to failure: any protection devices required by product standards, or suggested by common sense for obvious safety requirements, must be installed externally to the controller.

LIABILITY AND RESIDUAL RISKS

The liability of Schneider Electric and Eliwell is limited to the correct and professional use of the product according to the directives referred to herein and in the other supporting documents, and does not cover any damage (including but not limited to) the following causes:

- unspecified installation/use and, in particular, in contravention of the safety requirements of the legislation in force in the country of installation and/or specified in this document;
- use on equipment which does not provide adequate protection against electrocution, water and dust in the actual installation conditions;
- use on devices which allow access to dangerous parts without the aid of a keyed or tooled locking mechanism;
- tampering with and/or modification of the product;
- installation/use on equipment that does not comply with the regulations in force in the country of installation.

DISCLAIMER

This document is the exclusive property of Eliwell and cannot be reproduced or circulated unless expressly authorised by Eliwell. All possible care has been taken to ensure the accuracy of this document; nevertheless, Eliwell Controls srl cannot accept liability for any damage resulting from its use. The same applies to any person or company involved in the creation and preparation of this document. Eliwell reserves the right to make aesthetic or functional changes at any time without notice.

DISPOSAL

The equipment (or product) must be subjected to separate waste collection in compliance with the local legislation on waste disposal.

NOTE: Electrical equipment must be installed, used and repaired by qualified personnel only. Schneider Electric and Eliwell accept no responsibility for any consequences resulting from the use of this material.
A qualified person is someone who has specific skills and knowledge regarding the structure and the operation of electrical equipment and who has received safety training on how to avoid the inherent dangers.

Serial Communication

By default, serial communication is disabled. To enable serial communication:

1. Press and hold the SET button for 3 seconds until USr appears on the display.
2. Using the UP and DOWN buttons, select the inS parameter section.
3. Press and release the SET button.
4. Using the UP and DOWN buttons, select the Add folder.
5. Press and release the SET button and select the **SEE** parameter.
6. Set the value to **y** and confirm by pressing the SET button.

NOTE: After enabling serial communication, the PA1 and PA2 passwords must be configured.
NOTE It is mandatory to configure both passwords. The password 1000 value is not allowed
Serial communication becomes active only after this procedure has been completed.
For password recovery procedure, refer to the User Guide.

Serial Communication Access Level

The **E2E** parameter, located in the Add folder, defines the serial communication access level:
E2E = **n** → Read-only access.
E2E = **y** → Read/write access.

Eliwell Controls s.r.l.
Via dell'Industria, 15 • Z.I. Paludi
32016 Alpago (BL) - ITALY
T: +39 0437 166 0000
www.eliwell.com

MADE IN ITALY

Customer's Technical Support:
T: +39 0437 166 0005
E: Techsuppeliwell@se.com

Sales:
T: +39 0437 166 0060 (Italy)
T: +39 0437 166 0066 (other countries)
E: saleseliwell@se.com

UK CA
UK Authorized Representative:
Schneider Electric Limited
Stafford Park 5
Telford, TF3 3BL
United Kingdom

EWHT 600 NT
9IS54964.00 - EN - rel. 07/26
© 2026 Eliwell. All rights reserved.