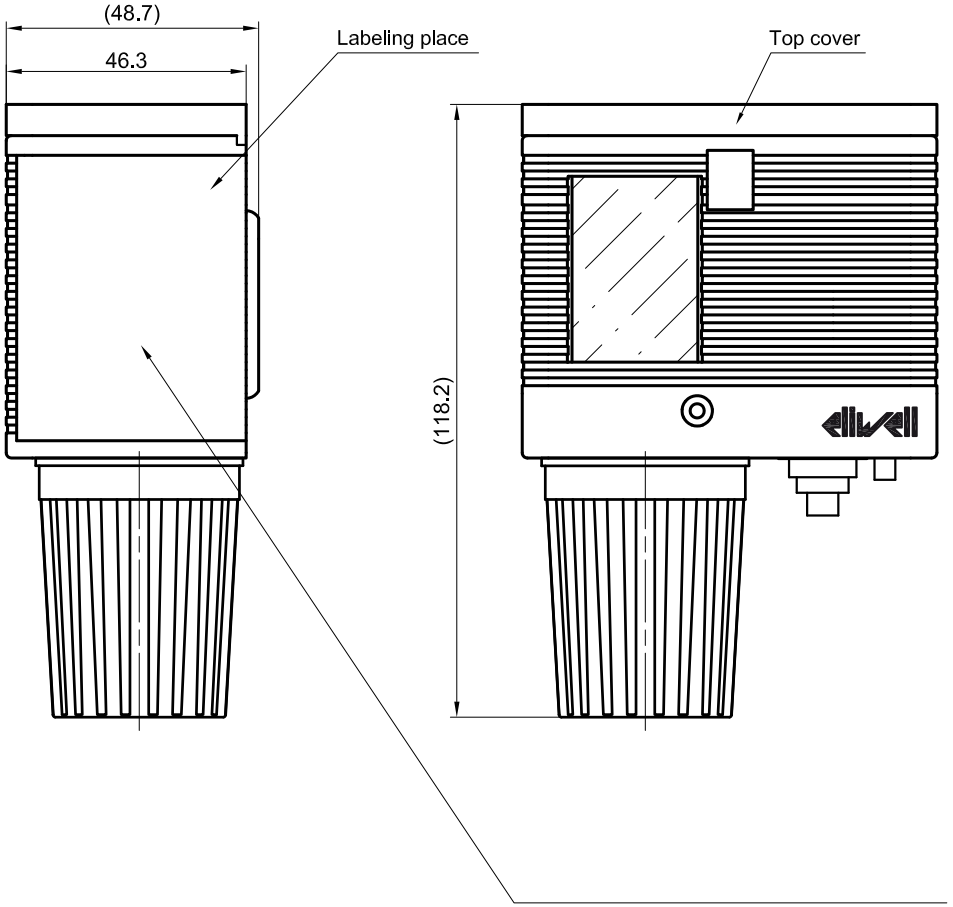

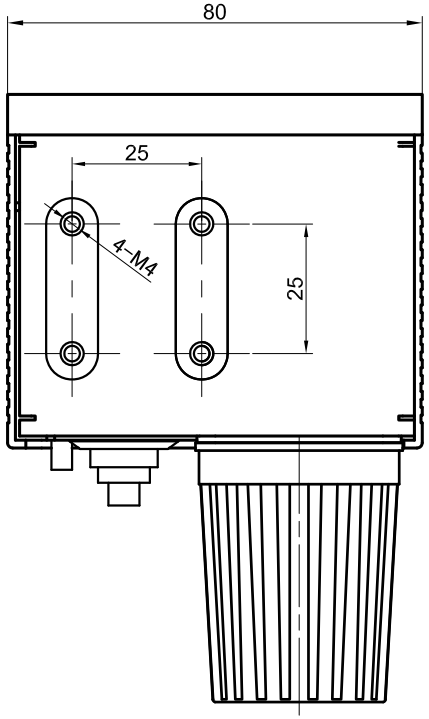

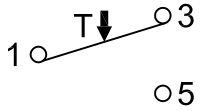

(1): Common contact
(1)-(5): Open on temperature rise
(1)-(3): Open on temperature drop

Specifications

1.Type: Auto reset
2.Differential: Fixed
3.Configuration: Single
4.Contact configuration: SPDT
5.Rated current: 1-3 (or 1-5): 16(16)A 240Vac
1-5 (or 1-3): 1(1)A 240Vac
6.Degree of protection: IP44 with top cover
IP20 without top cover
7.Method of mounting control: Independently mounted
8.Ambient working temperature: -40T65℃
9.Intended transportation conditions: -40T65℃，10-90%RH (non condensing situation)

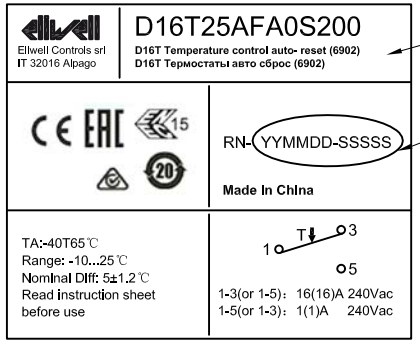

D16T Temperature control auto- reset (6902)
D16T Термостаты авто сброс (6902)

Product traceability,
date and serial number

			FACTORY SETTING				
Model	TEMPERATURE RANGE [℃]	DIFF.RANGE [℃]	CUT IN [℃]	CUT OUT [℃]	DIFF. [℃]	Use terminals	Sensor type
D16T25AFA0S200	-10…+25	5	3±1.2	-2±1.2	5±1.2	1-3	Ambient

Revision Hystory				
Curr	Prev	Note	Signature	Date

Designer		Date	
Checked			
Verifyed			
Approved			

Fixed Temperature Controls

D16T25AFA0S200

	Weicht	Ratio
		1:1(A3)
Page1	Total Pages 2	

by Schneider Electric

Product code structure

Type
D
Case size
16 Case 80mm
Product type
T Temperature control
Temperature range
25 -10...25 ℃
Reset type / differential
AF Auto reset / fixed differential
Sensor type
A Ambient
Capillary length
0 Ambient
Pin contact configuration
S Standard AgNi
Kit and packaging
2 topcover + knob + instruction sheet
Customlzatlon
00 standard model

Available pressure connections

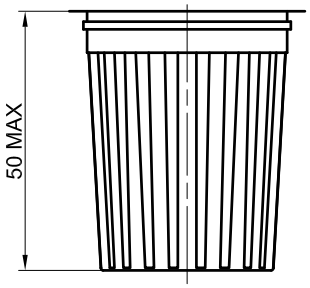

(A)

Revision Hystory				
Curr	Prev	Note	Signature	Date

Designer		Date	
Checked			
Verifyed			
Approved			

Fixed Temperature Controls

D16T25AFA0S200

	Weicht	Ratio
		1:1(A3)
Page 2	Total Pages 2	

eliwell by Schneider Electric