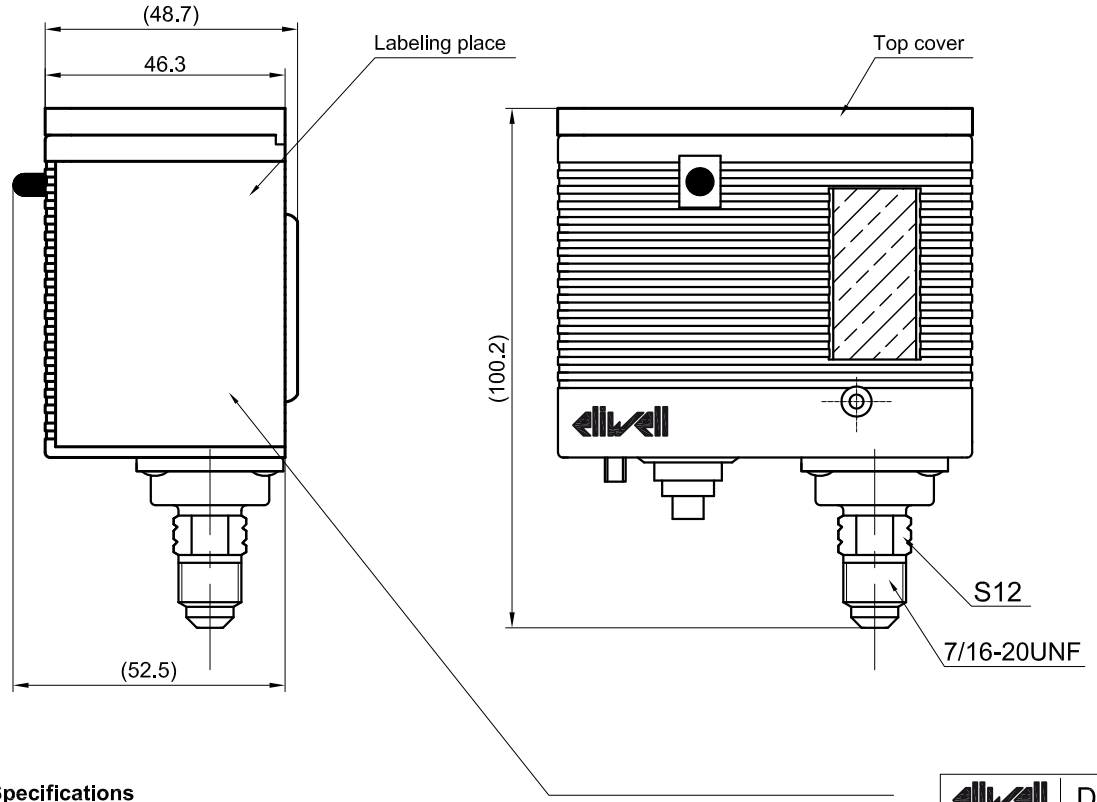

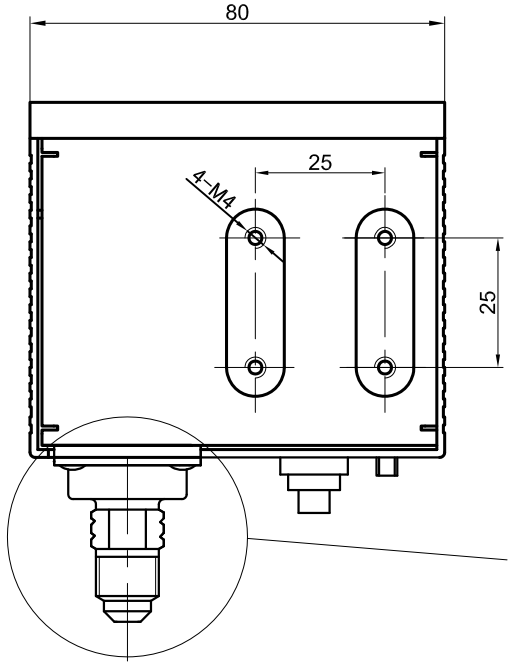

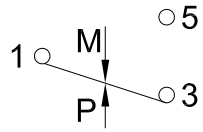

(1): Common contact
(1)-(3): Open on pressure rise
(1)-(5): Open on pressure drop

see next page for available connection variants and accessories

Specifications

- Type: Manual reset
- Differential: Non Adjustable
- Configuration: Single
- Contact configuration: SPDT
- Rated current: 1-3 (or 1-5): 16(16)A 240Vac
  1-5 (or 1-3): 1(1)A 240Vac
- Degree of protection: IP30 with top cover
  IP20 without top cover
- Method of mounting control: Independently mounted
- Ambient working temperature: -40T65℃
  Intended transportation conditions: -40T65℃， 10-90%RH (non condensing situation)
- Max refrigerant temperature: 120°C

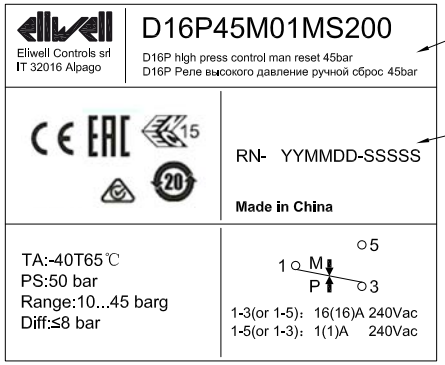

D16P high press control man reset 45bar
D16P Реле высокого давление ручной сброс 45bar

Product traceability, date and serial number

Model	PRESSURE RANGE [barg]/[psig]	DIFF.RANGE [barg]/[psig]	FACTORY SETTING CUT OUT [barg]/[psig]	CUT IN [barg]/[psig]	DIFF. [barg]/[psig]	Use terminals	Max.PS [barg]/[psig]	Burst Pressure [barg]/[psig]
D16P45M01MS200	10…45 / 145…653	≤8 / ≤116	42±1/ 609±14	≥33/ ≥479	≤8 / ≤116	1-3	50 / 725	200 / 2900

Revision Hystory				
Curr	Prev	Note	Signature	Date

Designer		Date	
Checked			
Verifyed			
Approved			

Non Adjustable HIGH PRESSURE CONTROLS

D16P45M01MS200

Weicht	Ratio
	1:1(A3)
Page1	Total

by Schneider Electric

Product code structure

Type
D
Case size
16 Case 80mm
Product type
P Pressure Switch
Pressure range (xx)
45 10…45 barg
Reset type
M0 Manual(single switch)
Product configuration
1 Standard version
Pressure connection (y)
M 7/16-20UNF
Pin contact configuration
S Standard AgNi
Kit and packaging
2 topcover + knob + instruction sheet
Customization
00 standard model

Available pressure connections

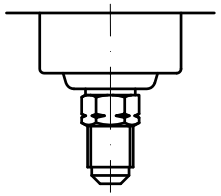

(M)

Revision Hystory				
Curr	Prev	Note	Signature	Date

Designer		Date	
Checked			
Verifyed			
Approved			

Non Adjustable HIGH PRESSURE CONTROLS

D16P45M01MS200

	Weicht	Ratio
		1:1(A3)
Page2	Total	

eliwell by Schneider Electric