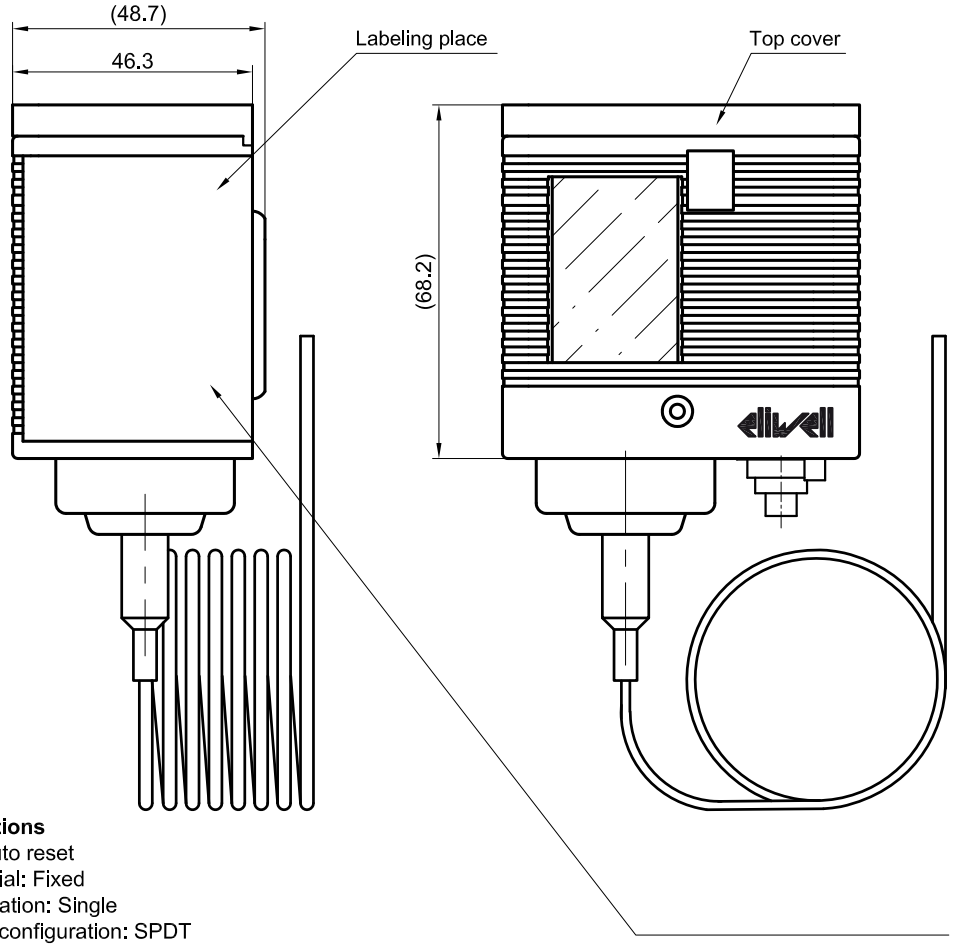

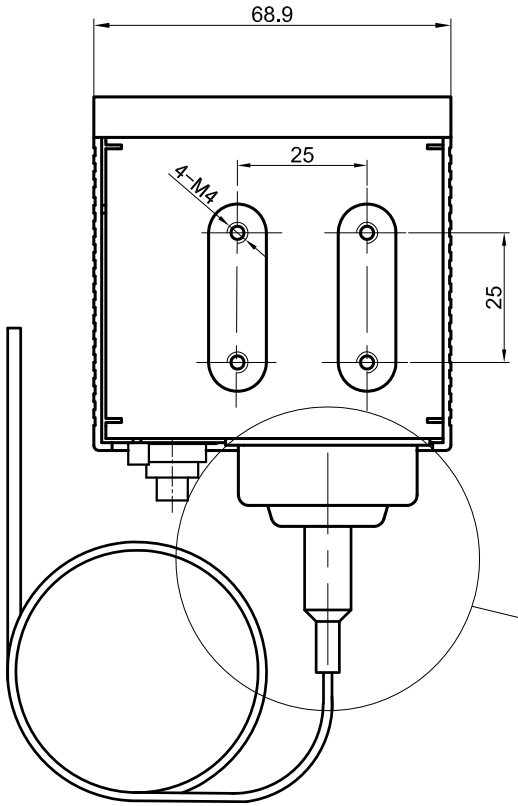

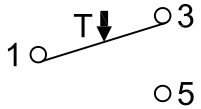

(1): Common contact
(1)-(5): Open on temperature rise
(1)-(3): Open on temperature drop

see next page for available connection variants and accessories

Specifications

1.Type: Auto reset
2.Differential: Fixed
3.Configuration: Single
4.Contact configuration: SPDT
5.Rated current: 1-3 (or 1-5): 16(16)A 240Vac
1-5 (or 1-3): 1(1)A 240Vac
6.Degree of protection: IP44 with top cover
IP20 without top cover
7.Method of mounting control: Independently mounted
8.Ambient working temperature: -40T65℃
9.Intended transportation conditions: -40T65℃, 10-90%RH (non condensing situation)

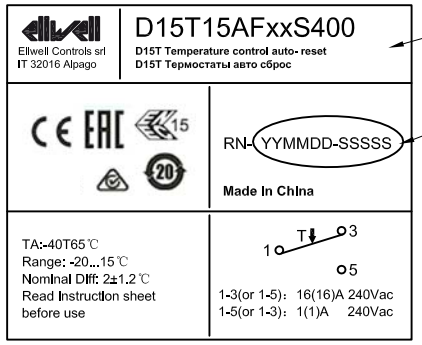

D15T Temperature control auto- reset
D15T Термостаты авто сброс

Product traceability, date and serial number

Model	TEMPERATURE RANGE [℃]	DIFF.RANGE [℃]	FACTORY SETTING CUT IN [℃]	CUT OUT [℃]	DIFF. [℃]	Use terminals	Sensor type
D15T15AFC2S400	-20…+15	2	5±1.2	3±1.2	2±1.2	1-3	2m capillary
D15T15AFC3S400	-20…+15	2	5±1.2	3±1.2	2±1.2	1-3	3m capillary
D15T15AFC6S400	-20…+15	2	5±1.2	3±1.2	2±1.2	1-3	6m capillary
D15T15AFC1S400	-20…+15	2	5±1.2	3±1.2	2±1.2	1-3	12m capillary
D15T15AFA0S400	-20…+15	2	5±1.2	3±1.2	2±1.2	1-3	Ambient

Revision Hystory				
Curr	Prev	Note	Signature	Date

Designer		Date	
Checked			
Verifyed			
Approved			

Fixed Temperature Controls

D15T15AFxxS400

Weicht	Ratio
	1:1(A3)

Page 1 | Total Pages 2

by Schneider Electric

Product code structure

Type
- **D**

Case size
- **15** Case 68mm

Product type
- **T** Temperature control

Temperature range
- **15** -20...15 ℃

Reset type / differential
- **AF** Auto reset / fixed differential

Sensor type
- **A** Ambient
- **C** Straight capillary

Capillary length
- **0** Ambient
- **2** 2m
- **3** 3m
- **6** 6m
- **1** 12m

Pin contact configuration
- **S** Standard AgNi

Kit and packaging
- **4** 1 instruction sheet into bulk

Customization
- **00** standard model

Available pressure connections

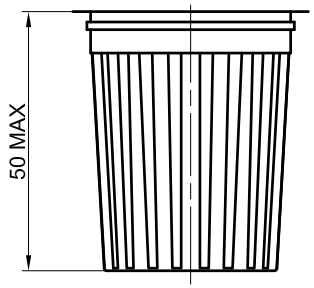

(A)

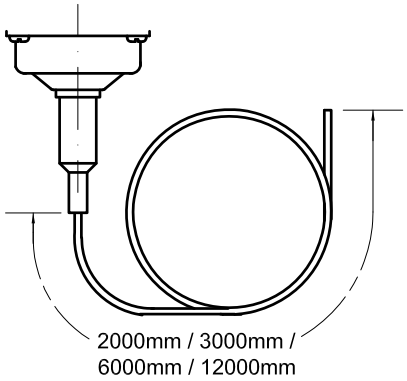

(C)

Revision Hystory				
Curr	Prev	Note	Signature	Date

Designer		Date	
Checked			
Verifyed			
Approved			

Fixed Temperature Controls

D15T15AFxxS400

	Weicht	Ratio
		1:1(A3)
Page 2	Total Pages 2	

eliwell by Schneider Electric