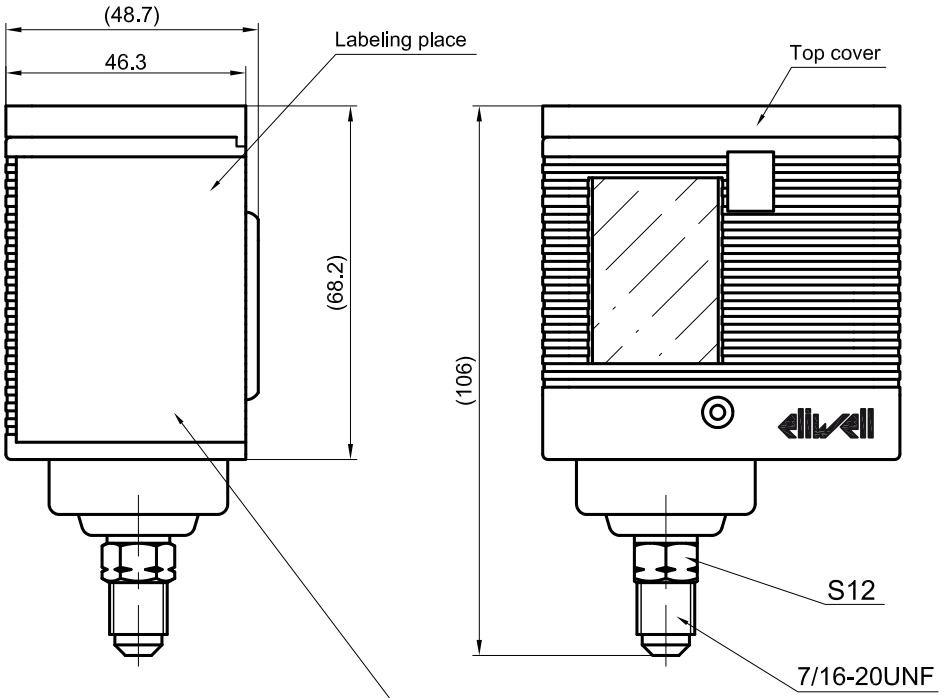

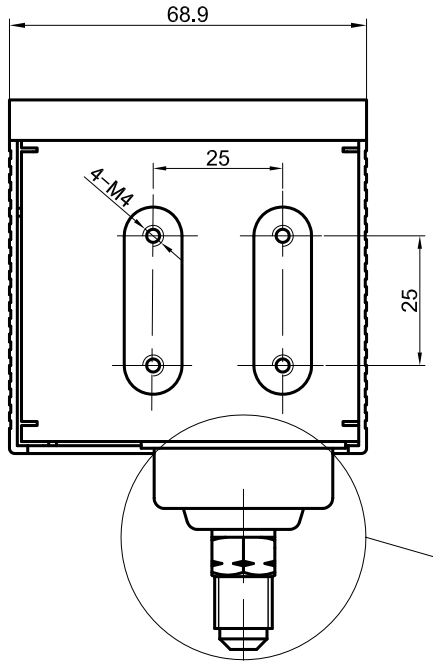

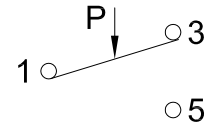

(1): Common contact
(1)-(3): Open on pressure rise
(1)-(5): Open on pressure drop

see next page for available connection variants and accessories

Specifications

- Type: Auto reset
- Differential: Adjustable
- Configuration: Single
- Contact configuration: SPDT
- Rated current: 1-3 (or 1-5): 16(16)A 240Vac
  1-5 (or 1-3): 1(1)A 240Vac
- Degree of protection: IP44 with top cover
  IP20 without top cover
- Method of mounting control: Independently mounted
- Ambient working temperature: -40T65℃
  Intended transportation conditions: -40T65℃ , 10-90%RH (non condensing situation)
- Max refrigerant temperature: 120°C

D15P Low pressure control auto reset
D15P Реле низкого давление автоматический сброс

Product traceability, date and serial number

Model	PRESSURE RANGE [barg]/[psig]	DIFF.RANGE [barg]/[psig]	FACTORY SETTING CUT OUT [barg]/[psig]	CUT IN [barg]/[psig]	DIFF. [barg]/[psig]	Use terminals	Max.PS [barg]/[psig]	Burst Pressure [barg]/[psig]
D15P07A01MS400 D15P07A01CS400	-0.3…7 / -4…101	0.6…4 / 9…58	2.0±0.15 / 29±2	3.0±0.15 / 43±2	1.0±0.15 / 14±2	1-3	17 / 246	80 / 1160

Revision Hystory				
Curr	Prev	Note	Signature	Date

Designer		Date	
Checked			
Verifyed			
Approved			

Adjustable LOW PRESSURE CONTROLS

D15P07A01yS400

	Weicht	Ratio
		1:1(A3)
Page1	Total	

by Schneider Electric

Product code structure

Type
- D

Case size
- 15 Case 68mm

Product type
- P Pressure Switch

Pressure range (xx)
- 07 -0.3…7 barg

Reset type
- A0 Automatic(single switch)

Product configuration
- 1 Standard version

Pressure connection (y)
- M 7/16-20UNF
- C Capillary flare nut

Pin contact configuration
- S Standard AgNi

Kit and packaging
- 4 1 instruction sheet into bulk

Customization
- 00 standard model

Available pressure connections

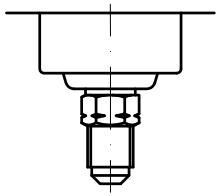

(M)

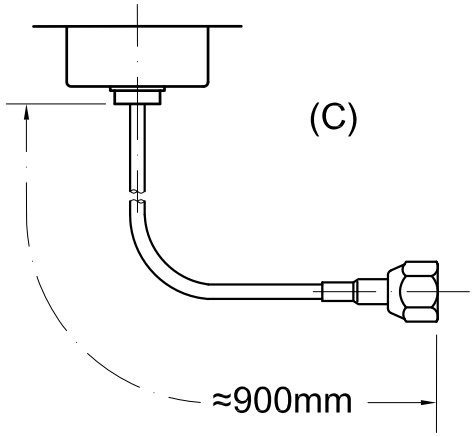

(C)

Revision Hystory				
Curr	Prev	Note	Signature	Date

Designer		Date	
Checked			
Verifyed			
Approved			

Adjustable LOW PRESSURE CONTROLS

D15P07A01yS400

	Weicht	Ratio
		1:1(A3)
Page2	Total	

eliwell by Schneider Electric